# Anglo-Chinese School (Junior)

**SEMESTRAL ASSESSMENT 2 (2018)**

**PRIMARY 4**

**MATHEMATICS**

**Booklet A**

**Monday** **29 October 2018** **1 h 45 min**

Name: _____ (  ) Class: 4.(  )

**INSTRUCTIONS TO PUPILS**

1 Do not turn over the pages until you are told to do so.

2 Follow all instructions carefully.

3 There are 20 questions in this booklet.

4 Answer ALL questions.

5 Shade your answers in the Optical Answer Sheet (OAS) provided.

**This question paper consists of 9 printed pages(inclusive of cover page).**

## Section A

Questions **1** to **20** carry 2 marks each.
For each question, four options are given. One of them is the correct answer. Make your choice (1, 2, 3 or 4). Shade the correct oval (1, 2, 3 or 4) on the Optical Answer Sheet (OAS). (40 marks)

---

1. The value of the digit 1 in 38 419 is _____.

   1) 10
   2) 100
   3) 1000
   4) 10 000

2. Which of the following is a multiple of both 6 and 8?

   1) 14
   2) 24
   3) 36
   4) 64

3. How many one-thirds are there in 3 wholes?

   1) 1
   2) 6
   3) 3
   4) 9

4. $7\frac{4}{9} = \frac{\boxed{?}}{9}$

What is the missing number in the box?

1) 28
2) 59
3) 63
4) 67

5. Which of the following decimals is represented by letter A in the number line?

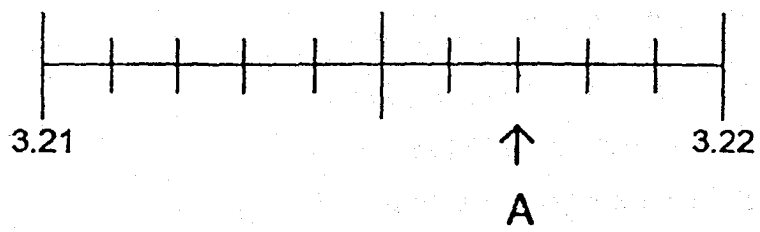


1) 3.22
2) 3.27
3) 3.212
4) 3.217

6. In the figure below, which angle is greater than a right angle?

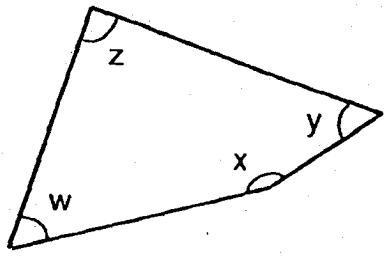


1) ∠ w
2) ∠ x
3) ∠ y
4) ∠ z

7. Which one of the following fractions is more than $2\frac{1}{2}$?

1) $\frac{5}{2}$

2) $\frac{8}{3}$

3) $\frac{9}{5}$

4) $\frac{10}{4}$

8. 2001.8 is the same as _____.

1) 2 thousands and 180 hundreds
2) 2 thousands and 180 tens
3) 20 hundreds and 180 tenths
4) 20 hundreds and 180 hundredths

9. 4.07 is 2 less than _____.

1) 2.07
2) 4.05
3) 4.09
4) 6.07

10. Which of the following letter has **no** line of symmetry?

1) A 2) C

3) N 4) O

11. Mrs Heng bought a carton of 1 ℓ of milk. She gave the milk equally to her 4 children. How much milk did each ~~of~~ child drink?

1) 0.2 ℓ

2) 0.25 ℓ

3) 5 ℓ

4) 4 ℓ

12. The bar graph below shows the number of goals Ronaldo scored from 2013 to 2017.

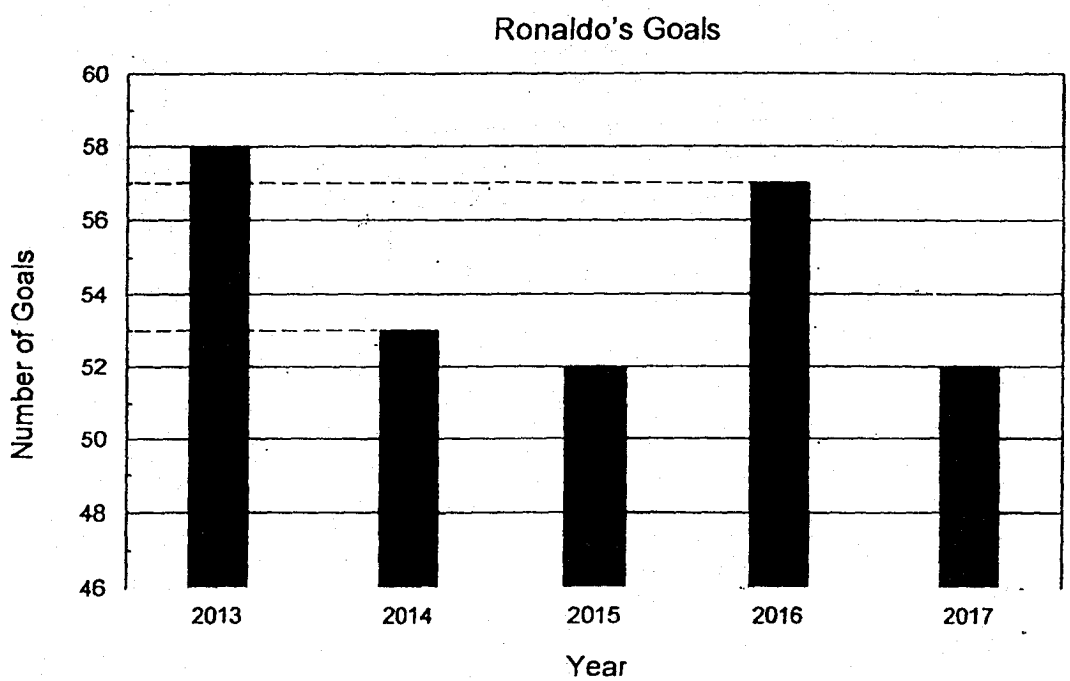


1) 270

2) 271

3) 272

4) 273

13. Tim reached home at 1050. He read a book for 45 minutes. He then did some exercises for 55 minutes. At what time did Tim finish his exercise?

1) 11 35
2) 11 45
3) 12 20
4) 12 30

14. The following grid shows the position of A, B, C, D and E. Which letter is south-west of A?

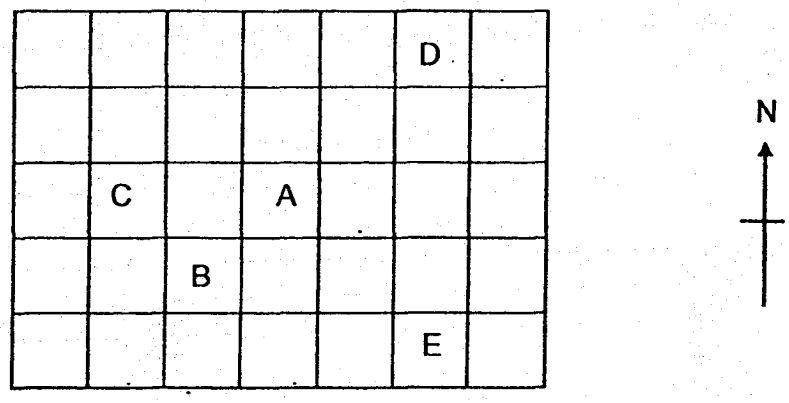


1) B
2) C
3) D
4) E

15. The table below shows the number of times students were late from January to May. A total of 63 students were late for the 5 months.

| Month | Jan | Feb | Mar | Apr | May |
|---|---|---|---|---|---|
| Number of students | 16 | 13 | 12 | 7 | ? |

How many pupils were late in May?

1) 5
2) 15
3) 22
4) 48

16. The figure below is made up of two rectangles, X and Y. What is the area of the figure?

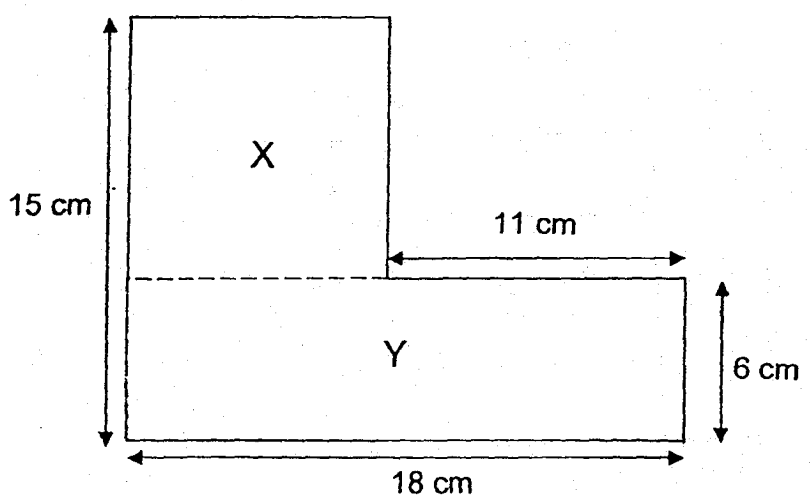


1) 171 $cm^2$
2) 228 $cm^2$
3) 273 $cm^2$
4) 336 $cm^2$

17. Isaac had $\frac{3}{5}$ kg of sugar. He had $\frac{1}{4}$ kg more than Caleb. What was the total mass of sugar they had altogether?

1) $\frac{7}{20}$ kg

2) $\frac{17}{20}$ kg

3) $\frac{19}{20}$ kg

4) $1\frac{9}{20}$ kg

18. The figure below is made up of 3 rectangles. What is the perimeter of the figure?

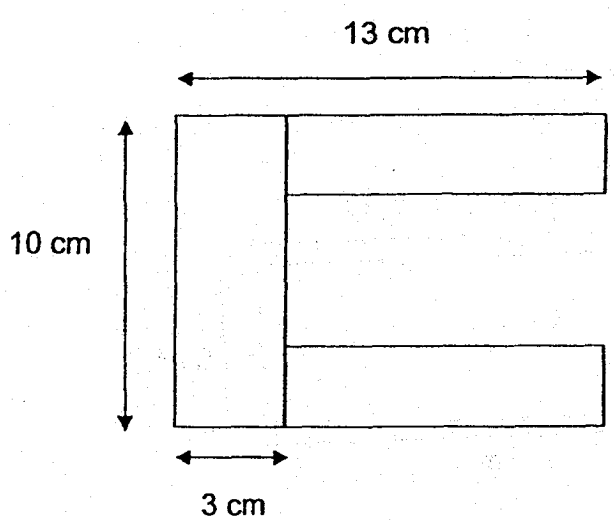


1) 46 cm

2) 56 cm

3) 66 cm

4) 76 cm

19. Andre had 76 more erasers than Ben at first. After Andre bought another 20 erasers, he had 3 times as many erasers as Ben. How many erasers did Ben have at first?

1) 32
2) 48
3) 96
4) 288

20. Mr Kumar packed 138 pens into boxes. Each box contained 8 pens. He sold each box of pens at $6 and each remaining pen at $1 each. How much would he collect if he sold all the pens?

1) $102
2) $104
3) $108
4) $138

**End of Booklet A**

# Anglo-Chinese School (Junior)

**SEMESTRAL ASSESSMENT 2 (2018)**

**PRIMARY 4**

**MATHEMATICS**

**Booklet B**

**Monday** **29 October 2018** **1 hr 45 min**

Name: _____ ( ) Class: 4.( ) Parent's Signature: _____

**INSTRUCTIONS TO PUPILS**

1 Do not turn over the pages until you are told to do so.

2 Follow all instructions carefully.

3 There are 25 questions in this booklet.

4 Answer ALL questions.

| Section | Possible Marks | Marks Obtained |
|---|---|---|
| A | 40 | |
| B | 40 | |
| C | 20 | |
| Total | 100 | |

## Section B

Questions **21** to **40** carry 2 marks each. Show your working clearly and write your answers in the boxes provided. For questions which require units, give your answers in the units stated.

(40 marks)

---

21. Write eighty thousand and eighteen in figures.

22. Two factors of 27 are 1 and 27. What are the other factors of 27?

23. Subtract 468 from 954.

24. Which two of the fractions below are equivalent to $\frac{6}{9}$?

$\frac{2}{3}$, $\frac{3}{6}$, $\frac{10}{15}$, $\frac{8}{18}$

_____ and _____

25. What is the value of $\frac{5}{8} + \frac{3}{4}$?

Express your answer as a mixed number.

26. Write 8 thousandths as a decimal.

27. Arrange the following numbers in order from the smallest to the greatest.

$$\frac{1}{4}\ ,\ 0.025\ ,\ 0.205$$

| |
|---|
| _____ , _____ , _____ |
| *(smallest)* *(greatest)* |

28. Round 16.49 to the nearest whole number.

| |
|---|
| |

29. Measure and write down the size of $\angle x$.

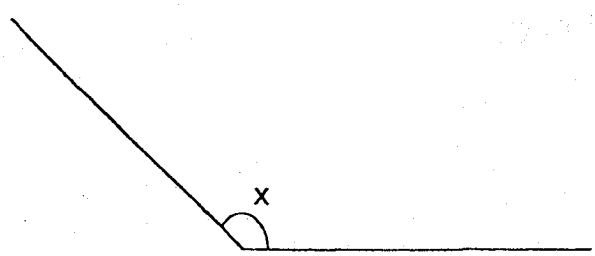


| |
|---|
| ° |

30. Express 567 min in hours and minutes

| _____ h ___ min |
|---|

31. The table below shows the number of medals Joseph Schooling and Rikako Ikee won at the Asian Games 2018. They won a total of 12 medals. How many bronze medals did Joseph Schooling win?

| Medal | Joseph Schooling | Rikako Ikee |
|---|---|---|
| Gold Medal | 2 | 6 |
| Silver Medal | 0 | 1 |
| Bronze Medal | ? | 0 |

| |
|---|
| |

32. In the figure shown, ABCD is a square. Find $\angle x$.

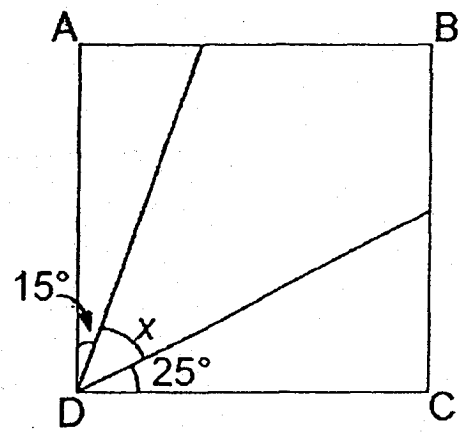


o

33. The figure below is made up of 2 rectangles. Find the area of the shaded part of the figure.

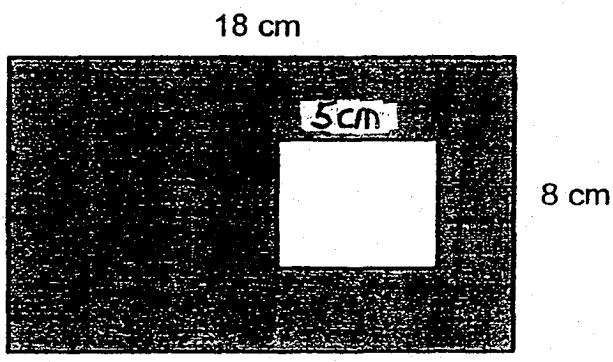

34. Ali spent $\frac{3}{5}$ of his money on fidget spinners. He then had \$30 left. How much money did he have at first?

\$

35. The figure below is made up of five similar rectangles. The length of each rectangle is 12 cm. What is the perimeter of the whole figure?

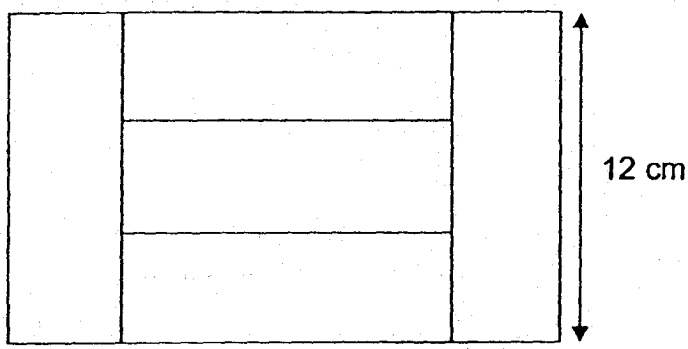


cm

The line graph below shows the temperature of Bangkok on a particular day.

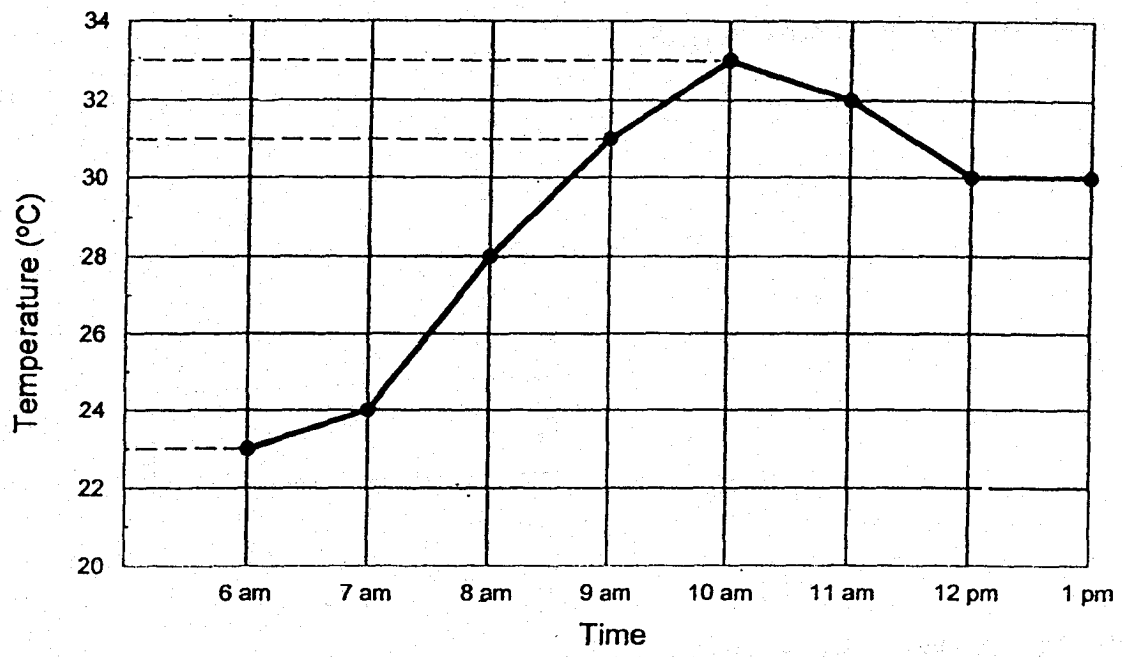


36. At what time was the highest temperature recorded? Leave your answer in 24-h clock.

37. During which 1-hour interval was the increase in temperature the greatest?

From _____ to _____

38. Julia is standing at the point P in the figure below. She is facing the playground. Where will she face if she makes a $\frac{3}{4}$ - turn in an anti-clockwise direction?

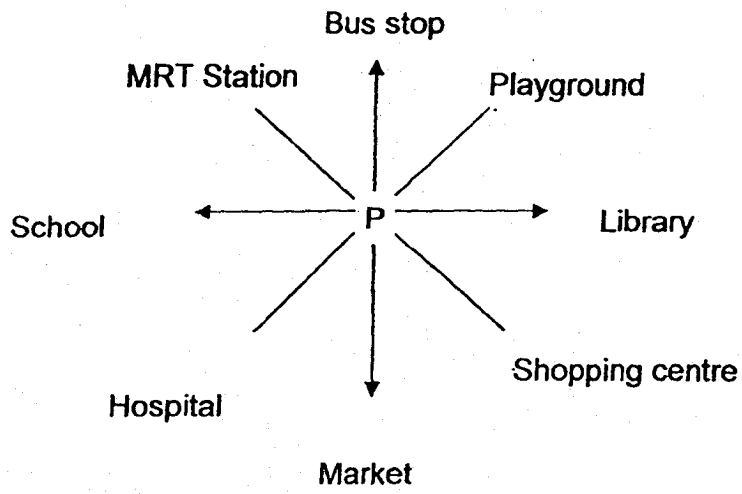


39. The perimeter of the rectangle shown below is 96 cm. The length of the rectangle is twice as long as its breadth. Find the area of the rectangle.

Perimeter = 96 cm

$cm^2$

40. Mrs Heng baked some cookies in the morning. She gave 128 cookies to her neighbour. She packed the remaining cookies into 9 jars. There were 34 cookies in each jar. How many cookies did Mrs Heng bake?

## Section C

For questions **41** to **45**, show your working clearly and write your answers in the spaces provided. The number of marks available is shown in brackets [ ] at the end of each question or part-question.

(20 marks)

---

41. Mr Alfred bought 3 packets of grapes. The mass of the packets of grapes were 0.5 kg, 1.7 kg and 2.2 kg.

    (a) What was the total mass of the grapes?

    (b) The grapes were sold at $6 per kg. Mr Alfred gave the cashier a $100 note. How much change did he receive?

Ans: a) _____ [1]

b) _____ [3]

42. There were red, blue and yellow beads in a container. $\frac{3}{8}$ of the beads were red, $\frac{1}{3}$ were blue and the rest were yellow.

a) What fraction of the beads were yellow?

b) Given that there were 48 more red beads than yellow beads, how many beads were there altogether?

Ans: a) _____ [2]

b) _____ [2]

43. Roy had a rope 82.5 cm long. He tied balloons on the rope. Part of the balloons were shown below. Each balloon was 7 cm apart from one another.

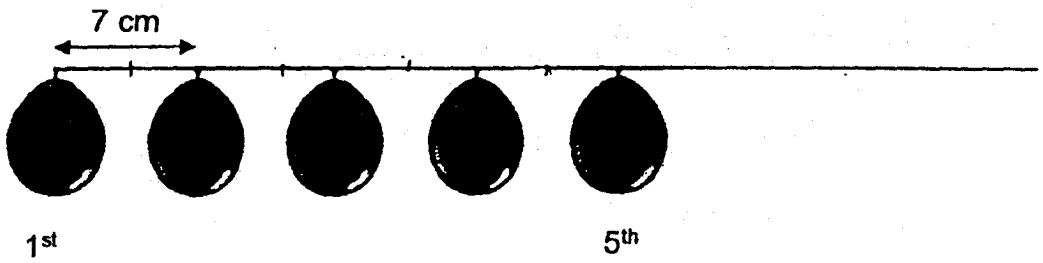


a) What was the length of string between the first and the fifth balloon?

b) What was the most number of balloons Roy could tie on the rope?

Ans: a) _____ [2]

b) _____ [2]

44. Ryan had 7 times as many rulers as pencils ~~as~~ at first. Ryan then sold 36 rulers and bought another 36 pencils. He had the same number of rulers and pencils in the end.

(a) How many pencils did Ryan have at first?

(b) How many rulers did Ryan have in the end?

Ans: a) _____ [2]

b) _____ [2]

45. Some adults and children went to a charity event to watch a rugby match. The price of an adult ticket was $2 and the price of a children's ticket was $1. There were 4 times as many adults as children. The total amount collected from the tickets was $1800. How many children went to the charity event?

Ans: _____ ___[4]

**End of Booklet B**

# ANSWER KEY

YEAR : 2018
LEVEL : PRIMARY 4
SCHOOL : ANGLO-CHINESE SCHOOL(JUNIOR)
SUBJECT : MATHEMATICS
TERM : SA2

**BOOKLET A, SECTION A**

| Q1 | Q2 | Q3 | Q4 | Q5 | Q6 | Q7 | Q8 | Q9 | Q10 |
|---|---|---|---|---|---|---|---|---|---|
| 1 | 2 | 4 | 4 | 4 | 2 | 2 | 4 | 4 | 3 |
| Q11 | Q12 | Q13 | Q14 | Q15 | Q16 | Q17 | Q18 | Q19 | Q20 |
| 2 | 3 | 4 | 1 | 2 | 1 | 3 | 3 | 2 | 2 |

**BOOKLET B , SECTION B**

Q21) 80 018
Q22) 3 and 9
Q23) 486
Q24) $\frac{2}{3}$ *and* $\frac{10}{15}$
Q25) $1\frac{3}{8}$
Q26) 0.008
Q27) 0.025 , 0.205 , $\frac{1}{4}$
Q28) 16
Q29) 135°
Q30) 9 h 27 min
Q31) 3
Q32) 50°
Q33) $124cm^2$
Q34) $75
Q35) 64 cm
Q36) 1000
Q37) From 7a.m. to 8 a.m.
Q38) Shopping centre
Q39) 512 $cm^2$
Q40) 434

**SECTION C**

**Q41)a) (4.4 kg)**

**0.5+1.7+2.2=4.4**

**b) ($73.60)**

**4.4×6=26.40**

**100 – 26.40 = 73.60**

**Q42)a) ($\frac{7}{24}$)**

$1 - \frac{3}{8} - \frac{1}{3} = \frac{7}{24}$

**b) ( 576 )**

$\frac{9}{24} - \frac{7}{24} = \frac{2}{24}$

**48÷2=24**

**24×24=576**

**Q43)a) (28 cm)**

**1 gap= 7**

**4 gap= 28**

**b) (12)**

**82.5÷7=11 remaining 5.5**

**11 + 1 =12**

**Q44)a) ( 12 )**

**6 units = 36 + 36 = 72**

**1 unit = 12**

**pencils represent 1 unit = 12**

**b) ( 48 )**

**Total no. ruler in the end = 4 unit = 4 × 12 = 48**

**Q45) ( 200 )**

**Price of 4 adult ticket = 8**

**Price of 1 child ticket = 1**

**Total price = 9**

**CHILDREN:ADULT**

**1:4**

**1800÷9=200**



**THE END**